REVISIONS		
ISS	ZONE	DESCRIPTION\PER REQUEST\DATE

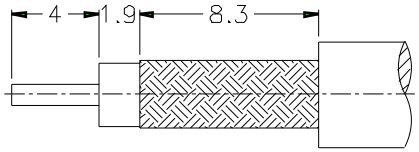

RECOMMENDED
CABLE STRIPPING DIM'S

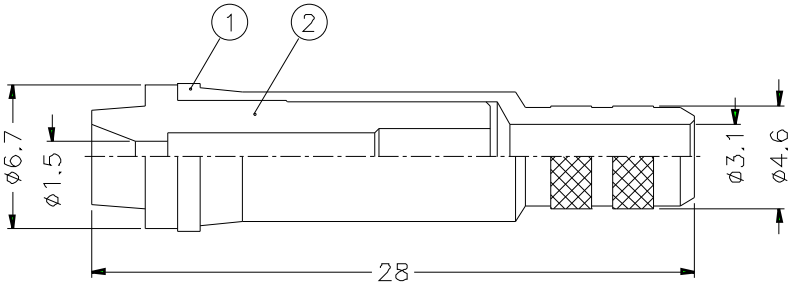

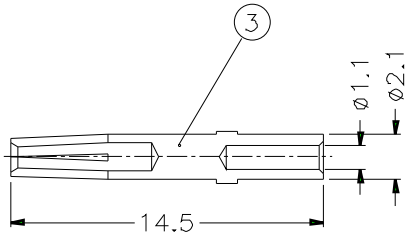

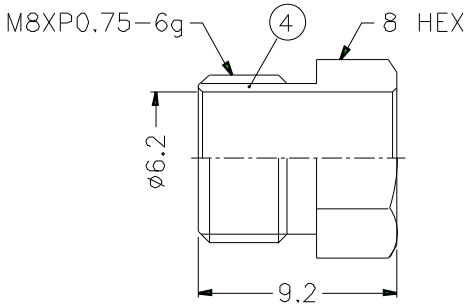

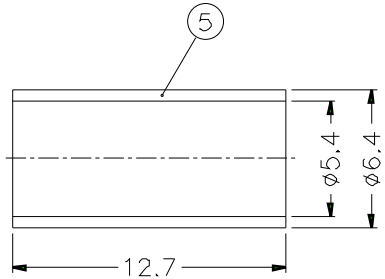

NOTES: FINISH (PLATING THICKNESS IN MICRO-INCHES)
1. BRASS PER QQ-B-626
2. NICKEL PL 100 MIN. THICK OVER COPPER STRIKE
3. PHOSPHOR BRONZE PER QQ-B-750
4. GOLD PL. 3 MIN. THICK OVER NICKEL PL. 100 MIN. THICK OVER COPPER STRIKE
5. JIS H 3250, C 2700

1. CRIMPED FERRULE HEX CRIMP SIZE .213"
2. CRIMPED CONTACT PIN HEX CRIMP SIZE .068"

NO.	DESCRIPTION	MATERIAL	FINISH	Q'TY	DRAWING NO.
5	FERRULE	NOTE 5	NOTE 2	1	FR-64/54X127
4	HEX NUT	NOTE 1	NOTE 2	1	FME6121A1-4-8/62
3	CONTACT PIN	NOTE 3	NOTE 4	1	FME6121B1-3-21/11
2	INSULATOR	DELRIN	NATURAL	1	FME6121B1-2-50-B
1	BODY	NOTE 1	NOTE 2	1	FME6121A1-1-46/31

DIMENSIONS ARE IN MILLIMETERS
UNLESS OTHERWISE SPECIFIED TOLERANCES
0 5-6 = ±0.2
6-30 = ±0.4
30-120 = ±0.6
120-315 = ±1
315-1000 = ±1.6
1000-2000 = ±2.4

SCALE 3/1 | ISSUE A | FILE NO.

PART NO. FME6121B1-ND3G-1-50

APPROVED	DATE	10-11-01'
CHECKED	DATE	10-11-01'
DRAWN	DATE	10-11-01'

Amphenol

TITLE
FME ROTATING NIPPLE

DRAWING NO.
KJ-FME6121B1-ND3G-58CU-50

ITEM NO.